P 60.10 K

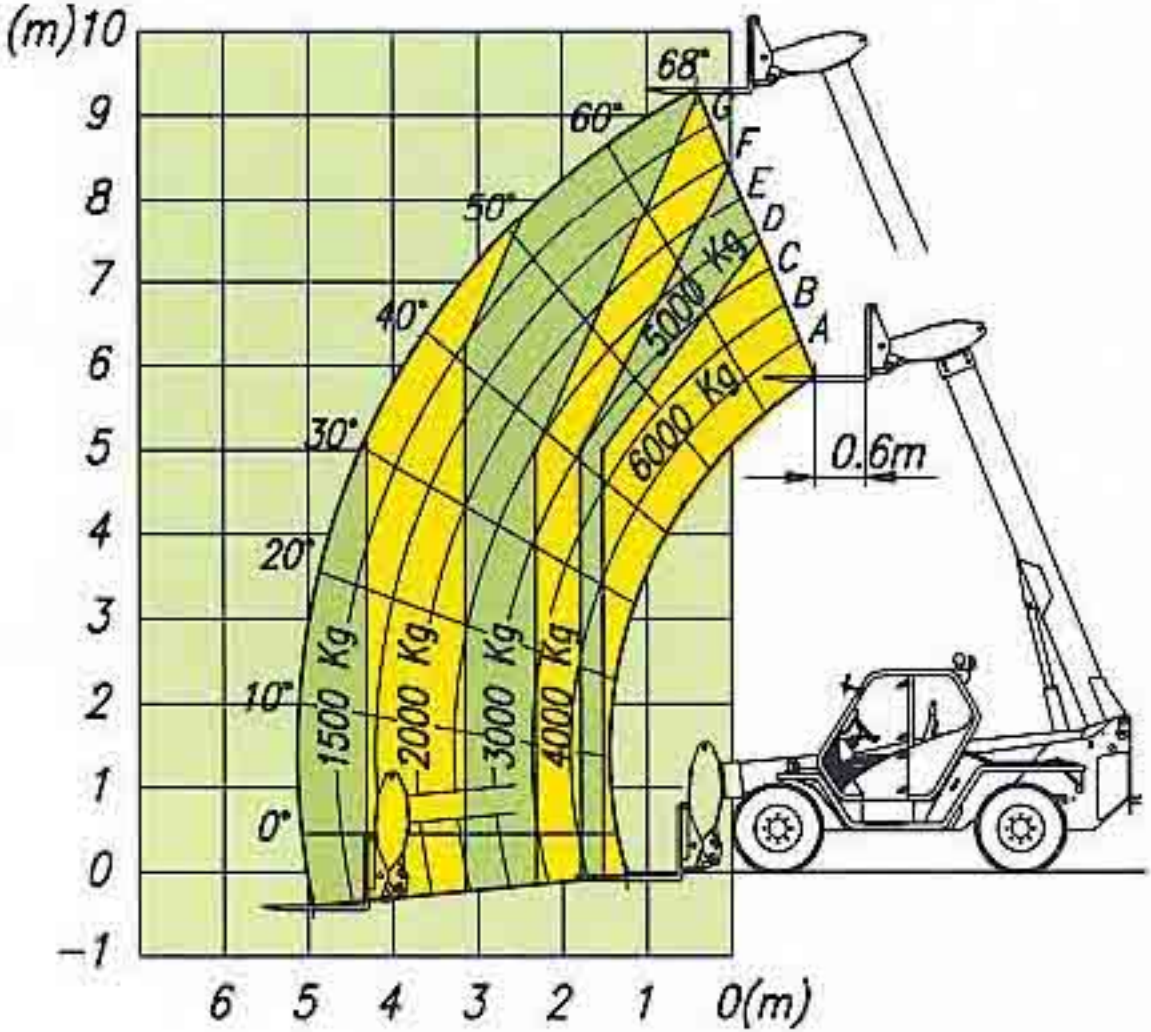
(m)
10
9
8
7
6
5
4
3
2
1
0
-1
6
5
4
3
2
1
0(m)
68°
60°
50°
40°
30°
20°
10°
0°
G
F
E
D
C
B
A
1500 Kg
2000 Kg
3000 Kg
4000 Kg
5000 Kg
6000 Kg
0.6m